Motion Control System Retrofits Increase Machine Productivity and Cut Lifecycle Costs

Quicker return on investment makes retrofits and upgrades attractive

In tough economic times, tight capital budgets often force companies to delay purchasing new equipment, despite their increasing need to reduce manufacturing costs. However, machines are key assets that must be maintained and supported for optimal productivity and quality.

Retrofitting the control system on an existing machine can provide a significant increase in performance. At the same time, it retains the investment in mechanical and power components that may still have many years of useful life. And for an OEM machine builder, upgrading the control system on an existing design can bring much of the benefit of developing a new machine at a fraction of the cost.

Benefits of upgrading to a high-performance electronic motion controller include:

1. Higher throughput by reducing the time it takes for an axis to move and stabilize at the new position and by supporting synchronization and gearing of multiple axes to increase the performance of complex motion systems.
2. Better quality through more precise positioning and advanced capabilities such as pressure control.
3. Reduced changeover time through the use of "recipes"—complete motion sequences that are downloaded to reconfigure a machine.
4. Reduced maintenance costs due to the lower shock and vibration provided by smoother motion.

Selecting a motion controller for retrofit applications

When retrofitting equipment, the systems integrator is faced with the challenge of designing around equipment that is either mandated by the end user (a certain brand of PLC, for example) or would be cost-prohibitive to replace. The goal of the integrator is to select a motion controller that can be adapted to the application, replacing only those components required to achieve the performance or productivity improvement goals.

Specific factors that must be considered include:

Communications support. An ideal motion controller for retrofit applications must be capable of supporting a wide range of communications interfaces and protocols for connection to the host system. If the bus is to be upgraded as well, the controller would need to interface to modern buses such as PROFIBUS or Allen-Bradley's EtherNet I/P. Alternatively, the new controller may need to plug into legacy systems with a popular industrial bus that has been around for a long time.

Transducer connectivity options. For efficient retrofit implementation, a motion controller must support direct connection to position feedback devices. In addition, since the ability to control pressure or force as well as position is often key to improving productivity and quality, the motion controller also needs to provide interfaces to pressure transducers.

Complementary operation. Motion controllers that have the capability of

running time-critical sequences within the controller at motion loop times allow fast, consistent motion control even with a slow PLC.

Advanced programming options. Machine productivity gains may require complex motion sequences to be performed, so the controller software should be easy to program. The controller's functional repertoire should support powerful operations such as simultaneous operation of multiple PID loops, full parameter sets including feed-forwards, and high-level instructions such as higher-order equation interpolation. A motion controller that can be programmed with high-level commands allows a motion project to be completed in significantly less time than with low-level machine commands, thus reducing costs and speeding time to market.

Synchronization of axes enables higher productivity

New motion controllers support the synchronization of multi-axis motion systems. Rather than "hardwiring" a machine to run at a certain speed, by enabling the motion of slave axes to follow the motion of master axes, the overall throughput of a machine may be varied and increased without risking jams or malfunctions. Faster motion can mean higher productivity for machine owners. Besides enabling simple linear relationships between axis motion, some motion controllers can support sophisticated relationships such as camming.

Simulators to shorten development time

By using a motion control software simulator provided by the motion controller manufacturer, the system integrator can test at his desk and prove out the motion system even before assembling the hardware. The advantage of this is that correct hydraulic system component sizing can be verified and correct programming algorithms can be selected and tried out more quickly, minimizing the time that the real hardware being upgraded needs to be pulled off-line.

Software support for tuning and diagnostics. Since tuning for optimal performance is key to obtaining the benefits of a control system upgrade, the motion controller should be supported by a suite of automated tuning tools to allow the graphical plot comparisons of actual and target performance. Automated tools such as Set up and Tuning Wizards make optimizing closed-loop control parameters quick and easy.

Applications expertise and commitment to customer support. When selecting a motion controller for a system upgrade, it is important to look beyond the product specs to also select a motion system supplier with expertise in the application of the technology. Mating new technology with existing systems can be a bit like completing a puzzle, and the motion controller manufacturer can help the process along by providing user-friendly features such as detailed on-line help, classroom and web based training classes, and experienced 24/7 telephone technical support.

Examples of Retrofits using Delta Computer Systems' RMC Family of Motion Controllers:

Plastics Injection Molding Machine Upgrade

Engineers at DeKalb Molded Plastics Inc. of Butler, IN identified a problem with one of their existing injection molding machines. Due to the fact that the molding process was running "open loop" (i.e., there was no precise regulation of the delivery rate of foam during the injection cycle), the molding cycle times varied greatly from cycle to cycle. As a result, the quality of the molded parts wasn't as uniform as the

company wanted. Some molded parts needed to be scrapped, and machine down-time resulted as process technicians dealt with the problems.

The company solved the problems by adding a closed-loop hydraulic motion controller to control the hydraulic cylinders that inject the foam. (see before/after system diagrams in Figure 1) Due to time constraints, retraining issues and cost, the customer did not wish to completely replace the existing machine control system.

The new multi-axis motion controller, an RMC Series controller by Delta Computer Systems, gets its inject cycle command information from the molding machine's existing Barber Colman MACO 8000

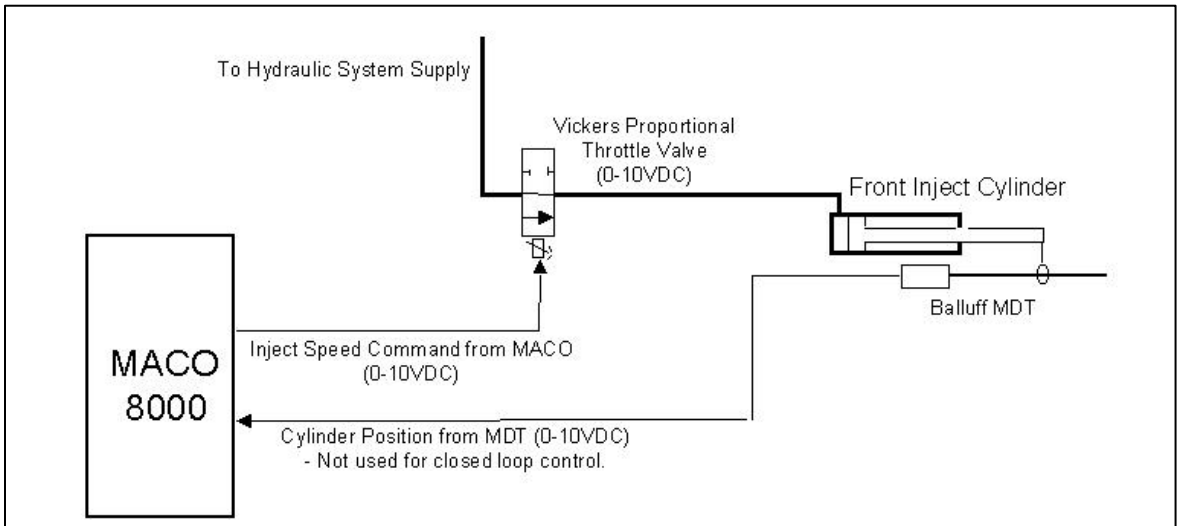

Figure 1. System block diagram **before** upgrade

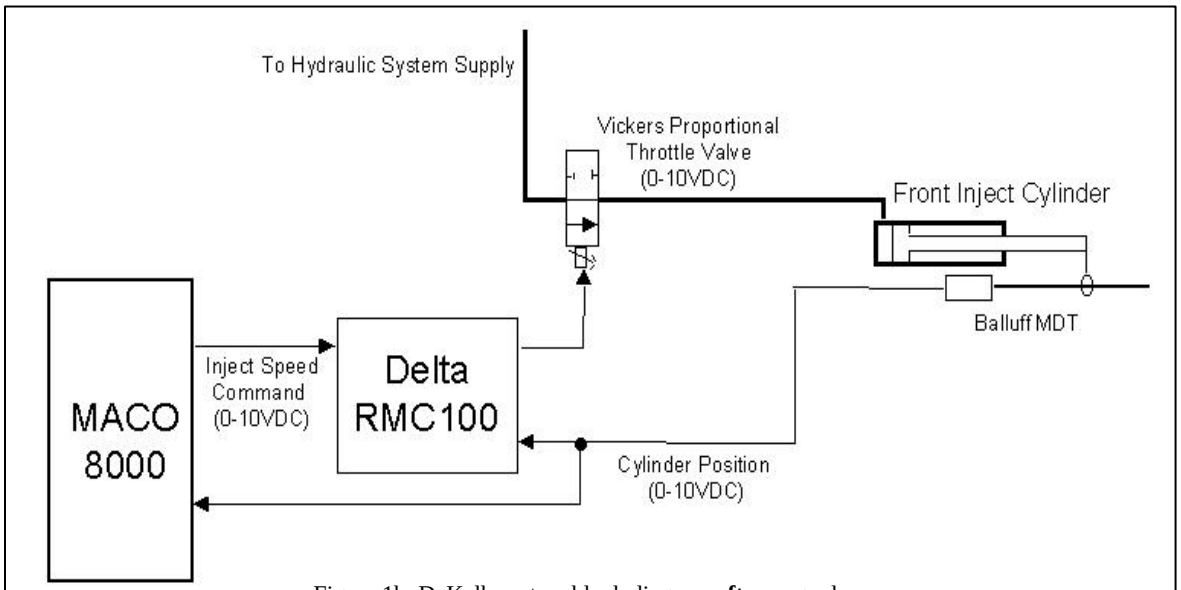

Figure 1b. DeKalb system block diagram **after** upgrade

controller (which previously drove the hydraulic valve directly). The RMC controls the velocity of the injector cylinders by driving a proportional valve using position feedback from magnetostrictive displacement transducers (MDTs) mounted on the cylinders. This add-on method permits the inject cycle step programming to remain in the familiar Barber-Colman controller, eliminating the need for technician re-training.

In addition, the Barber Colman controller monitors pressure transducers in the hydraulic cylinders as a safety measure to insure that pressures don't exceed preset limits.

The RMC motion controller was programmed using Delta's configuration software package. In addition to providing direct interfaces for all of the transducers and the proportional valve, the Delta controller was interfaced to a graphical user interface (GUI) software package that can display the actual versus target injection position, speed profiles, and valve drive command as an X-Y graph plot. It also provides for the creating and editing of "recipes" containing process control loop parameters, such as proportional and integral loop gains (P and I), and other set-point values, and storage by name for future retrieval in a Microsoft Access database. A new panel-mounted Windows-based PC with touch screen human-machine interface (HMI) gives machine operators a real-time "window" into the molding process (see "tuning" screen in fig. 2). In addition to facilitating the tuning of the motion controller for optimal performance, the graphical screens help the machine operators monitor and diagnose performance issues with the hydraulic components, such as insufficient oil pre-charge in the system's hydraulic fluid accumulator.

By adding closed-loop control of the injection process, DeKalb was able to reduce what was originally up to a 7-second difference between one molding cycle and another to under 50 msec (0.050 sec). In addition, they were able to improve the

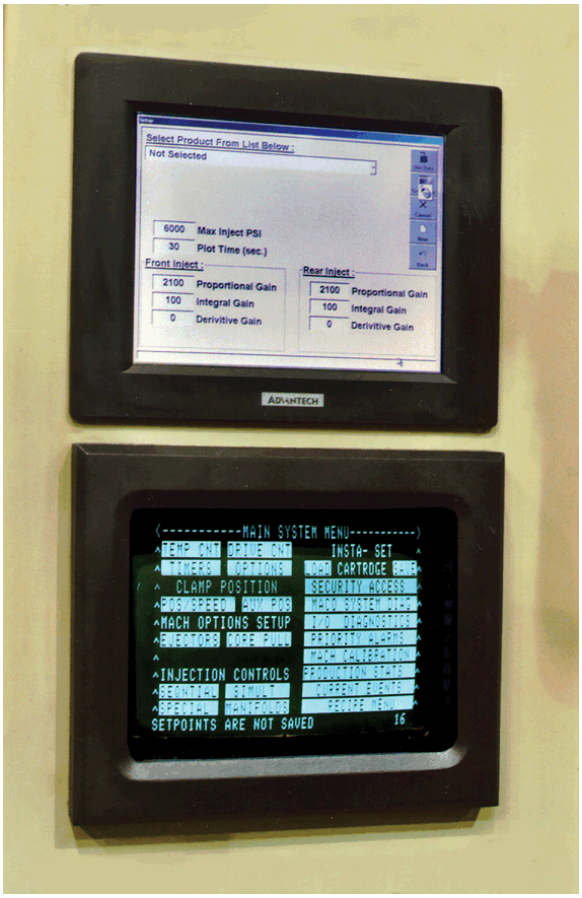

Figure 2. Retrofit projects often include upgrading the machine's operator interface, such as this one from the DeKalb Plastics injection molding machine.

quality of their molded output by more than 10%, and reduce machine downtime due to quality problems from 10% of production time to under 1%. The company expects that the payback period for the cost of the entire upgrade project to be under 6 months.

Paper Pulp Refiner Upgrade

The Norske Canada pulp refiner at Powell River, British Columbia has a thermo-mechanical pulp (TMP) refining process that presses wood chips between rotating grooved metal plates in a succession of

machines to produce individual fibers as an early step in the paper making process.

The positioning of the refining plates for inter-plate gap distance was initially controlled by a proprietary "black box" controller, and the mill personnel found it difficult to tune and troubleshoot the old rotary dial plate positioning controls. Damage to the plates can occur if they are allowed to collide, yet viewing the actual gap measurement was difficult for mill personnel.

A Delta Computer Systems RMC motion controller was installed to perform closed-loop control, monitoring the data from the MDTs up to 1000 times per second and then operating the proportional hydraulic valve to move the plate positioning piston to make the actual position match the target position. Figure 3 shows how the motion controller connects to the hydraulics. A servo-quality proportional valve was used so that small changes in valve position can be made to affect very precise hydraulic motion.

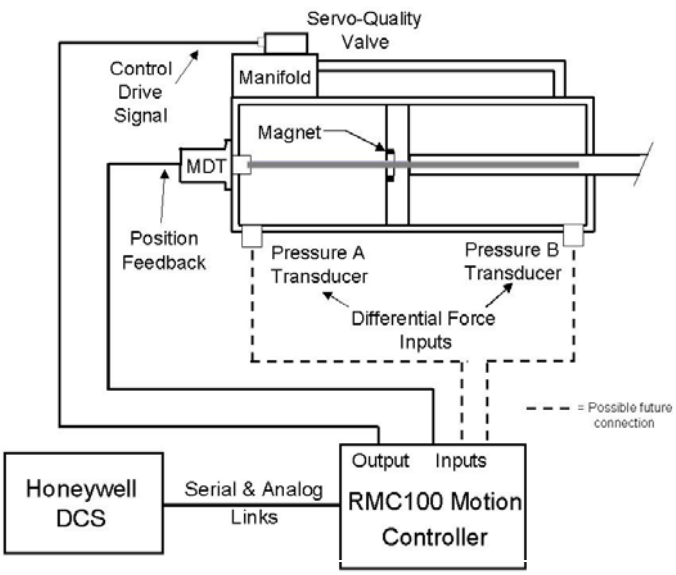

Figure 3. System schematic

The Delta controller has the capability of managing pressure and position control simultaneously, and the mill is adding pressure control to further improve system performance.

The Delta RMC series controller is interfaced to the mill's main Honeywell distributed control system (DCS) via serial and analog connections (see figure 3). The analog link provides the grinding plate position setpoint from the DCS (which obtains the setpoint information from the machine operator via an HMI with CRT screen.) The serial link carries status info from the RMC back to the DCS that can be used for tuning the process.

The RMC controller is programmed by writing high-level motion commands in a function table inside the controller, using Delta's motion control software. Hundreds of commands can be loaded in a single operation and held in the RMC's internal memory, allowing an entire motion sequence to be initiated by setpoint information from the Honeywell DCS. The Honeywell system is free to handle other control functions while the motion controller manages the hydraulics.

A key to meeting the performance requirements of applications like the gap control for the refiner upgrade is Delta controllers' suite of graphical tuning tools. Without special tools it is almost impossible to tune fast-moving processes – there is no way to see what is happening in real-time simply by observing the machinery as it moves. Delta's RMC software package solves this problem by allowing users to plot actual versus target values of key motion parameters over time, making it easy to see where even small positioning errors occur in order to guide the optimization process. Though they had no previous experience

with the RMC motion controller, the mill personnel found the new Delta controllers easy to program and tune. Once through the initial learning curve, they were able to tune the system themselves.

With the control system upgrade, the mill has gained three main benefits:

1. Fast and stable response from the machine. For example, electrical power usage by the machine (measured in megawatts) used to exhibit transients as the older control system moved the plate to compensate for the changing wood chip load. By providing quicker response to changing conditions and more accurate plate loading, the power consumption by the machine has smoothed out.
2. Increased operator confidence in the refining process. The old control system was hard to calibrate and operators had to frequently visit the machine, paying close attention to insure correct operation. With the new system, the DCS controller monitors the process closely and operators seldom need to go out to the refiner. And the new control system is enabling the collection of process data that was previously not tracked closely. For example, the mill has been exhibiting an availability of 97% for the past eight months. Before the upgrade, this parameter wasn't tracked closely.
3. By selecting vendors of state-of-the-art gear for the control system retrofit, the mill engineers also gained better availability of replacement modules, easier programming capability, and better access to all the parameters for tuning and optimizing.

Bushing Press Upgrade

A control system upgrade by system integrator Horizon Technology of Wyandotte, Michigan resulted in manufacturing cost savings of hundreds of thousands of dollars for the company's customer, a manufacturer of assemblies for the automotive industry.

The application involves pressing bushings into power steering housings. Before the upgrade, the hydraulic press actuator was controlled by simple two-position "bang-bang" valves using a limit switch to stop at the motion at the desired bushing position. However, the tolerance variations of the power steering housing made it impossible to be sure the bushing would always be fully seated without overstressing the housing. Dealing with the overstressed housings was very expensive, particularly if the damage did not show up until the unit was installed into a vehicle.

The system was upgraded to closed-loop servo control with pressure as well as position feedback. The new system is ten times more accurate (±0.003 vs. ±0.025 inch). The pressure limit mode of the Delta RMC is used to stop the motion when the pressure reaches the limit that indicates the bushing is fully seated. In addition to virtually eliminating defects, the RMC upgrade increased production by about 10%, mainly by eliminating a significant amount of setup time. The RMC also provided better information to the controlling PLC, so that quality criteria can be verified and documented.

Automotive Manufacturing Upgrade

Recently, one of Delta's distributors, HydraAir of Indianapolis, IN, upgraded the control systems in a plant that puts splines on automotive transmission shafts. The new hydraulic control system was used to

position the shafts precisely so that the spline teeth could be carved using a cold forming process. Key to the project was insuring that the plant would be down for the shortest possible time during the control system changeover. To minimize downtime, the engineer from HydraAir sat down with the plant's manufacturing engineer and helped him program and verify the motion for the new control system using Delta's software simulator. Even though the plant had scheduled three days for the upgrade, due in part to Delta's advanced simulation support; the actual conversion to use the new hydraulic controller took only one day.

Delta's Software Tools Simplify the Retrofitting Process

Upgrading the motion controls of your machine using Delta Computer Systems motion controllers is made easier by software tools that the company provides for free along with its motion control products. In addition to enabling the programming of the controllers with high-level motion commands, RMC software enables the graphing of motion profiles to simplify the motion tuning process (see Fig. 4.)

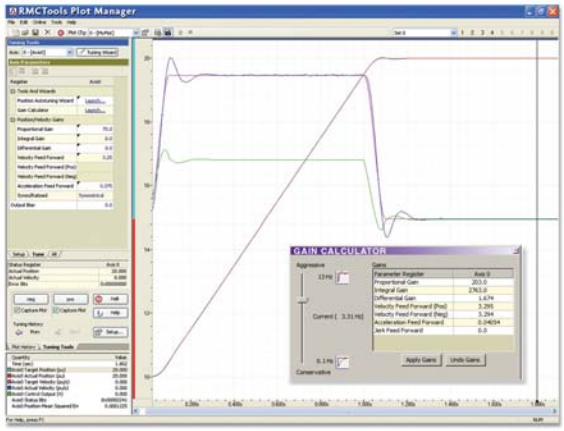

Figure 4. Delta's RMC software provides graphical tools to simplify the application tuning process.

Many applications can also benefit from using Delta's automated tuning tools, such as the Tuning Wizard. Also available is a software simulator that allows the testing and verification of motion control programs before the hardware is connected.

Controller Options Fit the Retrofit Task

Delta Computer Systems offers two new motion controller families, with ranges of control capacity to meet a wide range of retrofit needs, from one or two axes of motion control up to eight motion axes. Multiple controllers can be combined to

Figure 5. Delta Computer Systems' motion controllers can control from one to eight motion axes and are expandable with a wide range of I/O options.

build even larger motion systems (see Fig. 5).

Get More Information

More information is available on the above retrofitting applications and how Delta's products simplify the task of retrofitting motion control systems. Delta engineers are available to discuss the pros and cons of retrofitting control systems for OEMs, system integrators and end users.

DELTA
COMPUTER SYSTEMS